Appendix 1-A
Avocado Site Drawings

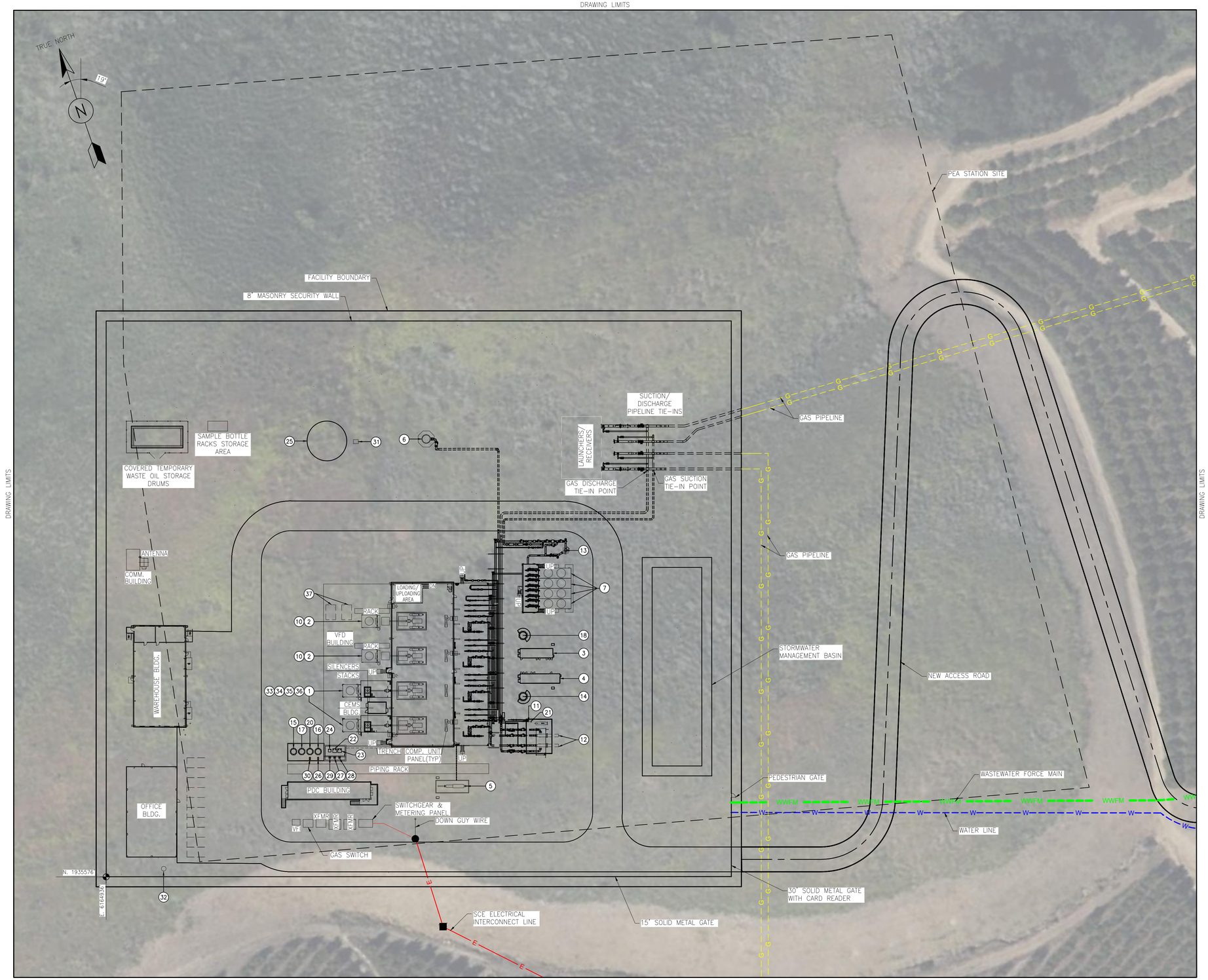

DRAWING NUMBER	REFERENCE DRAWING DESCRIPTION

EQUIPMENT LIST	
EQUIPMENT ID	EQUIPMENT DESCRIPTION
PACKAGE EQUIPMENT	
1	GAS COMPRESSORS (QTY 2)
2	ELECTRIC-DRIVEN GAS COMPRESSORS (QTY 2)
3	INSTRUMENT AIR COMPRESSOR SKID
4	STARTING AIR COMPRESSOR SKID
5	EMERGENCY GENERATOR SKID
6	BLOWDOWN STACK
EXCHANGERS	
7	DISCHARGE COOLERS (QTY 4)
8	AUXILIARY WATER COOLER
9	JACKET WATER COOLER
10	EDC LUBE OIL EXCHANGER MOTOR COOLER (QTY 2)
VESSELS	
11	GENERATOR FUEL GAS REGULATOR FILTER
12	FILTER/SEPARATORS (QTY 2)
13	DISCHARGE SCRUBBER
14	STARTING AIR RECEIVER
15	OILY WASTE STORAGE DRUM
16	ENGINE OIL STORAGE DRUM
17	WASTE OIL STORAGE DRUM
18	INSTRUMENT AIR RECEIVER
19	CONDENSATE DRIP DRUM
20	COOLANT STORAGE DRUM
21	COMPRESSOR FUEL GAS REGULATOR FILTER
22	COMPRESSOR AREA OILY WASTE TANK
23	COMPRESSOR AREA OIL WASTE TANK
24	COMPRESSOR AREA COOLANT DRAIN SUMP
25	WATER STORAGE TANK
PUMPS	
26	ENGINE OIL CHARGE PUMP
27	COMPRESSOR AREA OILY WASTE TANK PUMP
28	WASTE OIL TANK PUMP
29	COMPRESSOR ENGINE WASTE COOLANT PUMP
30	COOLANT CHARGE PUMP
31	FIRE WATER PUMP
32	WASTEWATER GRINDER PUMP
MISC	
33	INLET AIR FILTERS (QTY 2)
34	CATALYTIC CONVERTER (QTY 2)
35	EXHAUST SILENCER (QTY 2)
36	INLET SILENCER (QTY 2)
37	VAPOR RECOVERY UNITS (QTY 2)

LEGEND

- PEA STATION SITE
- ROAD CENTERLINE
- EDGE OF FACILITY / ACCESS ROAD
- E — SCE ELECTRICAL INTERCONNECT
- WWFM — WASTEWATER FORCE MAIN
- W — WATERLINE
- G — NEW GAS PIPELINE

NOTES:

1. SITE SPECIFIC SURVEY HAS NOT BEEN PERFORMED. DESIGN WAS DEVELOPED BASED ON PUBLICLY AVAILABLE TOPOGRAPHY. TOPOGRAPHY IS FROM AUTODESK INFRAWORKS MARCH-JUNE, 2025
2. DESIGN WAS DEVELOPED USING PUBLICLY AVAILABLE INFORMATION AND AERIAL IMAGERY. AERIAL IMAGERY IS FROM AUTOCAD CIVIL 3D JUNE, 2025
3. ASSUMPTIONS WILL NEED TO BE VALIDATED DURING THE SUBSEQUENT DESIGN PHASE.

0 50' 100'
SCALE: 1" = 50'-0"

REV	DATE	DRAWN	CHECKED	PRJ APV	SCG APV	ENG FILE NO	DESCRIPTION	WOA
0	07/02/2025	MCR	SLH				ISSUED FOR DR-001 RESPONSE	

	BY	DATE
DESIGNED:	S.HOPE	03/10/25
DRAWN:	M.RIZO	03/10/25
CHECKED:	S.HOPE	03/28/25
PROJ APV:		
SCG ENG APV:		
ENG FILE NO:		
WOA:		

DWG CLASS: 9,39 DWG DIST: 114
SCALE: 1" =50'-0"

SoCalGas
A Sempra Energy utility

VENTURA COMPRESSOR STATION MODERNIZATION PROJECT AVOCADO SITE CONCEPTUAL PLOT PLAN

DRAWING NUMBER 152084-3001-D-SKT REV 0

C:\Users\mcrizo\Burns & McDonnell\SoCalGas Ventura EPC Execution - Documents\CPUC Support\2025 Support\Design\CAD\Mech\XXXXXX-3001-D-SKT_Rev11.dwg, 8/28/2025 4:36 PM, Rizo, Mike C.

DRAWING NUMBER	REFERENCE DRAWING DESCRIPTION
152084-7131-D-SKT	ROAD & UTILITY TRENCH DETAILS

LEGEND

- PEA STATION SITE
- LIMITS OF PROPOSED GRADING
- EDGE OF FACILITY / ACCESS ROAD
- LIMITS OF PROPOSED PROPERTY LINE
- AGGREGATE SURFACING
- ASPHALT OR OTHER PAVEMENT

NOTES:

1. SITE SPECIFIC SURVEY HAS NOT BEEN PERFORMED. DESIGN WAS DEVELOPED BASED ON PUBLICLY AVAILABLE TOPOGRAPHY. TOPOGRAPHY IS FROM AUTODESK INFRAWORKS MARCH–JUNE, 2025
2. DESIGN WAS DEVELOPED USING PUBLICLY AVAILABLE INFORMATION AND AERIAL IMAGERY. AERIAL IMAGERY IS FROM AUTOCAD CIVIL 3D JUNE, 2025
3. ASSUMPTIONS WILL NEED TO BE VALIDATED DURING THE SUBSEQUENT DESIGN PHASE.
4. ALL DISTURBED SURFACES NOT COVERED WITH AGGREGATE, ASPHALT, CONCRETE, OR OTHER PERMANENT SURFACING SHALL BE SEEDED AND AN EROSION CONTROL BLANKET SHALL BE INSTALLED. THE TYPE OF EROSION CONTROL BLANKET AND SEED MIXTURE WILL BE DETERMINED DURING DETAILED DESIGN.

0 300' 600'
SCALE: 1" = 300'-0"

REV	DATE	DRAWN	CHECKED	PRJ APV	SCG APV	ENG FILE NO	DESCRIPTION	WOA
0	07/02/2025	MCR	JBB				ISSUED FOR DR-001 RESPONSE	

BY	DATE
DESIGNED: J.BAKKER	06/15/25
DRAWN: M.RIZO	06/15/25
CHECKED: S.HOPE	06/20/25
PROJ APV:	
SCG ENG APV:	
ENG FILE NO: E15043	
WOA:	

SoCalGas
A Sempra Energy utility

DWG CLASS: 9,39 DWG DIST: 114
SCALE: 1" = 300'-0"

VENTURA COMPRESSOR STATION
MODERNIZATION PROJECT
AVOCADO SITE
CONCEPTUAL OVERALL SURFACING PLAN

DRAWING NUMBER 152084-7001-D-SKT REV 0

C:\Users\mcrizo\Burns & McDonnell\SoCalGas Ventura EPC Execution - Documents\CPUC Support\2025 Support\Design\Civil - Structural\CAD\Avocado\152084-7001-D-SKT.dwg, 8/1/2025 2:40 PM, Rizo, Mike C.

DRAWING NUMBER	REFERENCE DRAWING DESCRIPTION

LEGEND

- PEA STATION SITE
- ROAD CENTERLINE
- LIMITS OF PROPOSED GRADING
- EDGE OF FACILITY / ACCESS ROAD
- AGGREGATE SURFACING
- ASPHALT OR OTHER PAVEMENT

NOTES:

1. SITE SPECIFIC SURVEY HAS NOT BEEN PERFORMED. DESIGN WAS DEVELOPED BASED ON PUBLICLY AVAILABLE TOPOGRAPHY. TOPOGRAPHY IS FROM AUTODESK INFRAWORKS MARCH–JUNE, 2025
2. DESIGN WAS DEVELOPED USING PUBLICLY AVAILABLE INFORMATION AND AERIAL IMAGERY. AERIAL IMAGERY IS FROM AUTOCAD CIVIL 3D JUNE, 2025
3. ASSUMPTIONS WILL NEED TO BE VALIDATED DURING THE SUBSEQUENT DESIGN PHASE.
4. ALL DISTURBED SURFACES NOT COVERED WITH AGGREGATE, ASPHALT, CONCRETE, OR OTHER PERMANENT SURFACING SHALL BE SEEDED AND AN EROSION CONTROL BLANKET SHALL BE INSTALLED. THE TYPE OF EROSION CONTROL BLANKET AND SEED MIXTURE WILL BE DETERMINED DURING DETAILED DESIGN.

0 50' 100'
SCALE: 1" = 50'–0"

REV	DATE	DRAWN	CHECKED	PRJ APV	SCG APV	ENG FILE NO	DESCRIPTION	WOA
0	07/02/2025	MCR	JBB				ISSUED FOR DR–001 RESPONSE	

BY	DATE
DESIGNED: J.BAKKER	06/15/25
DRAWN: M.RIZO	06/15/25
CHECKED: S.HOPE	06/20/25
PROJ APV:	
SCG ENG APV:	
ENG FILE NO: E15043	
WOA:	

SoCalGas
A Sempra Energy utility

DWG CLASS: 9,39 DWG DIST: 114
SCALE: 1" = 50'–0"

VENTURA COMPRESSOR STATION MODERNIZATION PROJECT AVOCADO SITE CONCEPTUAL SITE SURFACING PLAN

DRAWING NUMBER 152084–7002–D–SKT REV 0

C:\Users\mcrizo\Burns & McDonnell\SoCalGas Ventura EPC Execution – Documents\CPUC Support\2025 Support\Design\Civil – Structural\CAD\Avocado\152084–7002–D–SKT.dwg, 8/1/2025 2:51 PM, Rizo, Mike C.

DRAWING NUMBER	REFERENCE DRAWING DESCRIPTION

LEGEND

- PEA STATION SITE
- ROAD CENTERLINE
- EDGE OF FACILITY / ACCESS ROAD
- 5530 MAJOR CONTOUR
- 5531 MINOR CONTOUR
- 5530 EXISTING MAJOR CONTOUR
- 5531 EXISTING MINOR CONTOUR

NOTES:

1. SITE SPECIFIC SURVEY HAS NOT BEEN PERFORMED. DESIGN WAS DEVELOPED BASED ON PUBLICLY AVAILABLE TOPOGRAPHY. TOPOGRAPHY IS FROM AUTODESK INFRAWORKS MARCH–JUNE, 2025
2. DESIGN WAS DEVELOPED USING PUBLICLY AVAILABLE INFORMATION AND AERIAL IMAGERY. AERIAL IMAGERY IS FROM AUTOCAD CIVIL 3D JUNE, 2025
3. ASSUMPTIONS WILL NEED TO BE VALIDATED DURING THE SUBSEQUENT DESIGN PHASE.

0 80' 160'
SCALE: 1" = 80'–0"

REV	DATE	DRAWN	CHECKED	PRJ APV	SCG APV	ENG FILE NO	DESCRIPTION	WOA
0	07/02/2025	MCR	JBB				ISSUED FOR DR–001 RESPONSE	

BY	DATE
DESIGNED: J.BAKKER	06/15/25
DRAWN: M.RIZO	06/15/25
CHECKED: S.HOPE	06/20/25
PROJ APV:	
SCG ENG APV:	
ENG FILE NO: E15043	

SoCalGas
A Sempra Energy utility

DWG CLASS: 9,39 DWG DIST: 114
SCALE: 1" = 80'–0"

VENTURA COMPRESSOR STATION MODERNIZATION PROJECT AVOCADO SITE CONCEPTUAL GRADING PLAN

DRAWING NUMBER 152084–7003–D–SKT REV 0

C:\Users\mcrizo\Burns & McDonnell\SoCalGas Ventura EPC Execution – Documents\CPUC Support\2025 Support\Design\Civil – Structural\CAD\Avocado\152084–7003–D–SKT.dwg, 8/1/2025 2:44 PM, Rizo, Mike C.

DRAWING NUMBER	REFERENCE DRAWING DESCRIPTION
152084–5520–D–SKT	ELECTRICAL DISTR. INTERCONNECT PRELIMINARY DETAILS
152084–7131–D–SKT	ROAD & UTILITY TRENCH DETAILS
152084–7732–D–SKT	TWO GAS PIPELINES CORRIDOR DETAIL

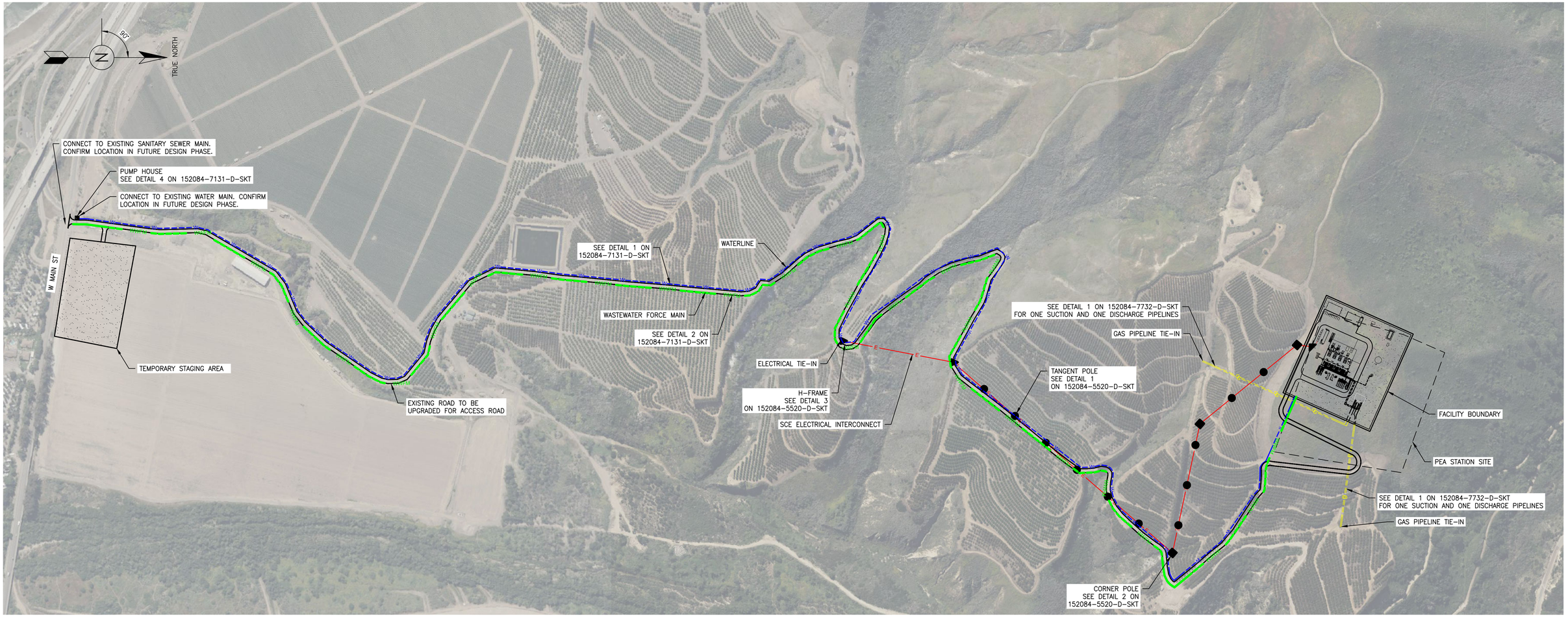

LEGEND

- PEA STATION SITE
- EDGE OF FACILITY / ACCESS ROAD
- WWFM — WASTEWATER FORCE MAIN
- W — WATERLINE
- G — NEW GAS PIPELINE
- E — SCE ELECTRICAL INTERCONNECT
- H FRAME
- TANGENT POLE
- CORNER POLE
- DEAD END POLE

NOTES:

1. SITE SPECIFIC SURVEY HAS NOT BEEN PERFORMED. DESIGN WAS DEVELOPED BASED ON PUBLICLY AVAILABLE TOPOGRAPHY. TOPOGRAPHY IS FROM AUTODESK INFRAWORKS MARCH–JUNE, 2025
2. DESIGN WAS DEVELOPED USING PUBLICLY AVAILABLE INFORMATION AND AERIAL IMAGERY. AERIAL IMAGERY IS FROM AUTOCAD CIVIL 3D JUNE, 2025
3. ASSUMPTIONS WILL NEED TO BE VALIDATED DURING THE SUBSEQUENT DESIGN PHASE.

0 300' 600'
SCALE: 1" = 300'–0"

REV	DATE	DRAWN	CHECKED	PRJ APV	SCG APV	ENG FILE NO	DESCRIPTION	WOA
0	07/02/2025	MCR	JBB				ISSUED FOR DR–001 RESPONSE	

	BY	DATE
DESIGNED:	J.BAKKER	06/15/25
DRAWN:	M.RIZO	06/15/25
CHECKED:	S.HOPE	06/20/25
PROJ APV:		
SCG ENG APV:		
ENG FILE NO:	E15043	
WOA:		

SoCalGas — A Sempra Energy utility

DWG CLASS: 9,39 DWG DIST: 114
SCALE: 1" = 300'–0"

VENTURA COMPRESSOR STATION MODERNIZATION PROJECT
AVOCADO SITE
CONCEPTUAL PIPELINE & UTILITY PLAN

DRAWING NUMBER 152084–7004–D–SKT REV 0

C:\Users\mcrizo\Burns & McDonnell\SoCalGas Ventura EPC Execution – Documents\CPUC Support\2025 Support\Design\Civil – Structural\CAD\Avocado\152084–7004–D–SKT.dwg, 8/28/2025 11:57 AM, Rizo, Mike C.

DRAWING NUMBER	REFERENCE DRAWING DESCRIPTION

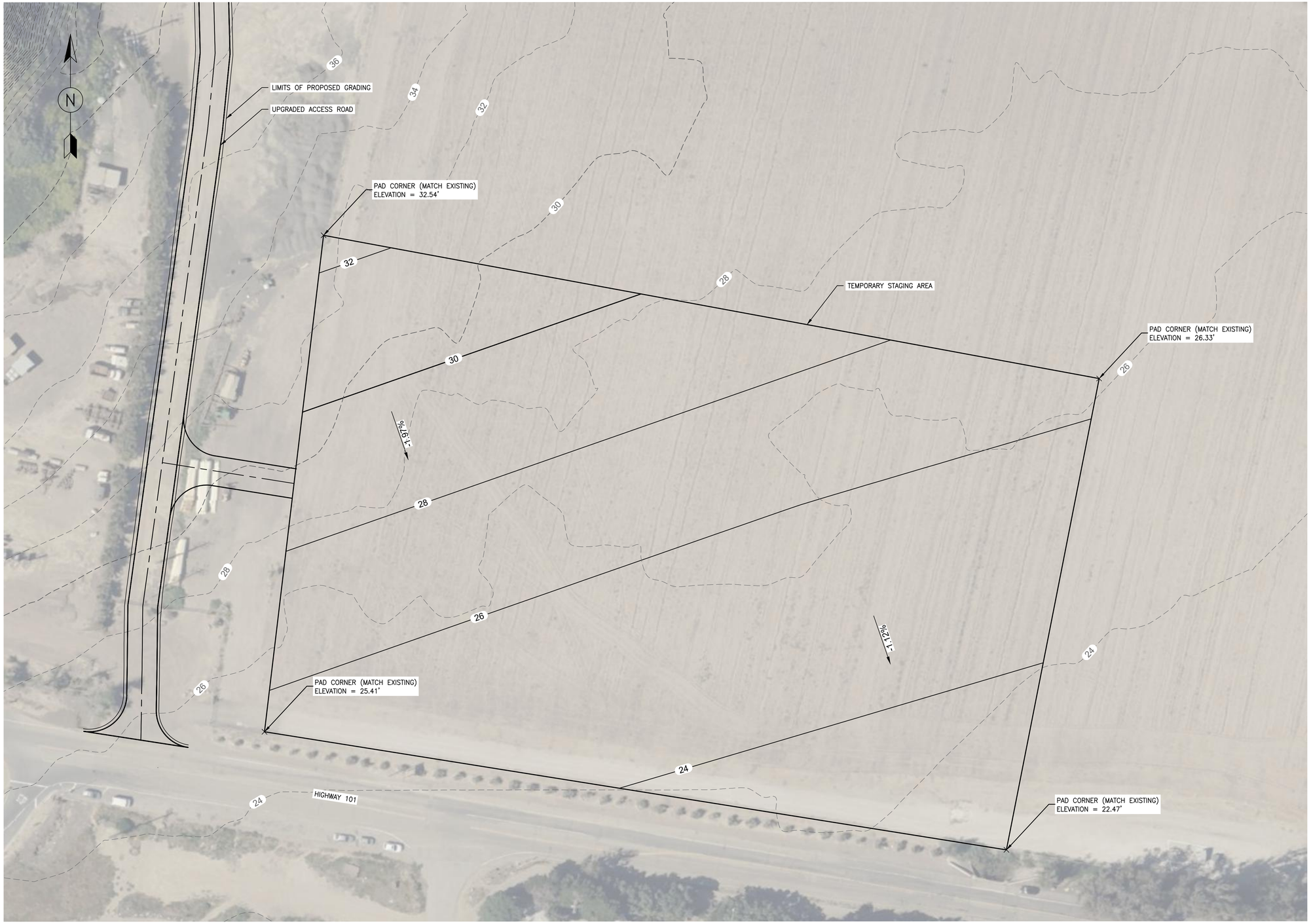

LEGEND

- ROAD CENTERLINE
- EDGE OF STAGING AREA
- 5530 MAJOR CONTOUR
- 5531 MINOR CONTOUR
- 5530 EXISTING MAJOR CONTOUR
- 5531 EXISTING MINOR CONTOUR

NOTES:

1. SITE SPECIFIC SURVEY HAS NOT BEEN PERFORMED. DESIGN WAS DEVELOPED BASED ON PUBLICLY AVAILABLE TOPOGRAPHY. TOPOGRAPHY IS FROM AUTODESK INFRAWORKS MARCH–JUNE, 2025
2. DESIGN WAS DEVELOPED USING PUBLICLY AVAILABLE INFORMATION AND AERIAL IMAGERY. AERIAL IMAGERY IS FROM AUTOCAD CIVIL 3D JUNE, 2025
3. ASSUMPTIONS WILL NEED TO BE VALIDATED DURING THE SUBSEQUENT DESIGN PHASE.

0 20' 40' 80'
SCALE: 1" = 40'–0"

REV	DATE	DRAWN	CHECKED	PRJ APV	SCG APV	ENG FILE NO	DESCRIPTION	WOA
0	07/02/2025	MCR	JBB				ISSUED FOR DR–001 RESPONSE	

	BY	DATE
DESIGNED:	J.BAKKER	06/15/25
DRAWN:	M.RIZO	06/15/25
CHECKED:	S.HOPE	06/20/25
PROJ APV:		
SCG ENG APV:		
ENG FILE NO:	E15043	
WOA:		

SoCalGas
A Sempra Energy utility

DWG CLASS: 9.39 DWG DIST: 114
SCALE: NONE

VENTURA COMPRESSOR STATION
MODERNIZATION PROJECT
AVOCADO SITE
CONCEPTUAL TEMPORARY STAGING AREA GRADING PLAN

DRAWING NUMBER 152084–7005–D–SKT REV 0

C:\Users\mcrizo\Burns & McDonnell\SoCalGas Ventura EPC Execution – Documents\CPUC Support\2025 Support\Design\Civil – Structural\CAD\Avocado\152084–7005–D–SKT.dwg, 7/30/2025 8:36 AM, Rizo, Mike C.

DRAWING NUMBER	REFERENCE DRAWING DESCRIPTION

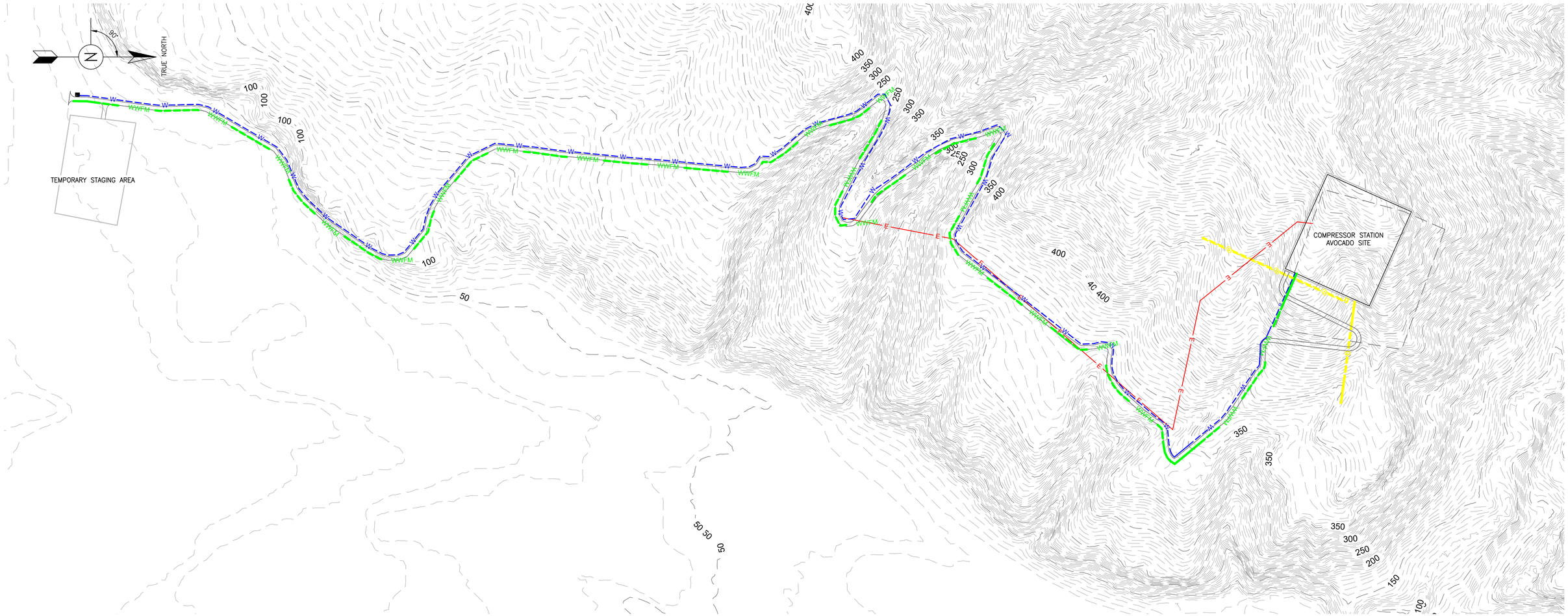

LEGEND

- PEA STATION SITE
- EDGE OF FACILITY / ACCESS ROAD
- WWFM — WASTEWATER FORCE MAIN
- W — WATERLINE
- G — NEW GAS PIPELINE
- E — SCE ELECTRICAL INTERCONNECT
- EXISTING MAJOR CONTOUR LINE
- EXISTING MINOR CONTOUR LINE

NOTES:

1. SITE SPECIFIC SURVEY HAS NOT BEEN PERFORMED. DESIGN WAS DEVELOPED BASED ON PUBLICLY AVAILABLE TOPOGRAPHY. TOPOGRAPHY IS FROM AUTODESK INFRAWORKS MARCH–JUNE, 2025
2. DESIGN WAS DEVELOPED USING PUBLICLY AVAILABLE INFORMATION AND AERIAL IMAGERY. AERIAL IMAGERY IS FROM AUTOCAD CIVIL 3D JUNE, 2025
3. ASSUMPTIONS WILL NEED TO BE VALIDATED DURING THE SUBSEQUENT DESIGN PHASE.

0 300' 600'
SCALE: 1" = 300'–0"

REV	DATE	DRAWN	CHECKED	PRJ APV	SCG APV	ENG FILE NO	DESCRIPTION	WOA
0	07/02/2025	MCR	JBB				ISSUED FOR DR–001 RESPONSE	

	BY	DATE
DESIGNED:	J.BAKKER	06/15/25
DRAWN:	M.RIZO	06/15/25
CHECKED:	S.HOPE	06/20/25
PROJ APV:		
SCG ENG APV:		
ENG FILE NO:	E15043	
WOA:		

SoCalGas
A Sempra Energy utility

DWG CLASS: 9,39 DWG DIST: 114
SCALE: 1" = 300'–0"

VENTURA COMPRESSOR STATION
MODERNIZATION PROJECT
AVOCADO SITE
CONCEPTUAL TOPOGRAPHIC MAP

DRAWING NUMBER 152084–7006–D–SKT REV 0

C:\Users\mcrizo\Burns & McDonnell\SoCalGas Ventura EPC Execution – Documents\CPUC Support\2025 Support\Design\Civil – Structural\CAD\Avocado\152084–7006–D–SKT.dwg, 8/19/2025 7:50 AM, Rizo, Mike C.

DRAWING NUMBER	REFERENCE DRAWING DESCRIPTION

LEGEND

- EDGE OF FACILITY
- PERMANENT LIMITS OF DISTURBANCE
- TEMPORARY LIMITS OF DISTURBANCE

NOTES:

1. SITE SPECIFIC SURVEY HAS NOT BEEN PERFORMED. DESIGN WAS DEVELOPED BASED ON PUBLICLY AVAILABLE TOPOGRAPHY. TOPOGRAPHY IS FROM AUTODESK INFRAWORKS MARCH–JUNE, 2025
2. DESIGN WAS DEVELOPED USING PUBLICLY AVAILABLE INFORMATION AND AERIAL IMAGERY. AERIAL IMAGERY IS FROM AUTOCAD CIVIL 3D JUNE, 2025
3. ASSUMPTIONS WILL NEED TO BE VALIDATED DURING THE SUBSEQUENT DESIGN PHASE.

0 300' 600'
SCALE: 1" = 300'–0"

REV	DATE	DRAWN	CHECKED	PRJ APV	SCG APV	ENG FILE NO	DESCRIPTION	WOA
0	07/02/2025	MCR	JBB				ISSUED FOR DR–001 RESPONSE	

BY	DATE
DESIGNED: J.BAKKER	06/15/25
DRAWN: M.RIZO	06/15/25
CHECKED: S.HOPE	06/20/25
PROJ APV:	
SCG ENG APV:	
ENG FILE NO: E15043	
WOA:	

SoCalGas
A Sempra Energy utility

DWG CLASS: 9,39 DWG DIST: 114
SCALE: 1" = 300'–0"

VENTURA COMPRESSOR STATION
MODERNIZATION PROJECT
AVOCADO SITE
CONCEPTUAL LIMITS OF DISTURBANCE

DRAWING NUMBER 152084–7007–D–SKT REV 0

C:\Users\mcrizo\Burns & McDonnell\SoCalGas Ventura EPC Execution – Documents\CPUC Support\2025 Support\Design\Civil – Structural\CAD\Avocado\152084–7007–D–SKT.dwg, 7/31/2025 2:44 PM, Rizo, Mike C.

DRAWING NUMBER	REFERENCE DRAWING DESCRIPTION
152084-7004-D-SKT	CONCEPTUAL PIPELINE & UTILITY PLAN

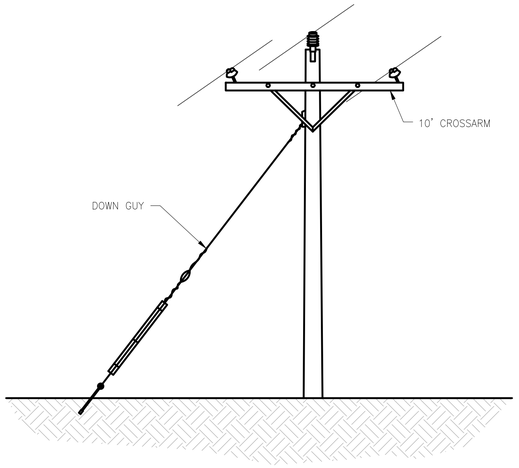

NOTES:

1. TYPICAL TANGENT POLE WITH SIDE GUY IF SLIGHT ANGLE ON THE LINE.
2. MOST ALL TANGENT POLES WILL NOT HAVE SIDE GUYS.
3. SEE DETAIL 4, THIS SHEET FOR POLE HOLE AND ANCHOR DEPTHS.

TANGENT AND ANGLE POLE

DETAIL 1

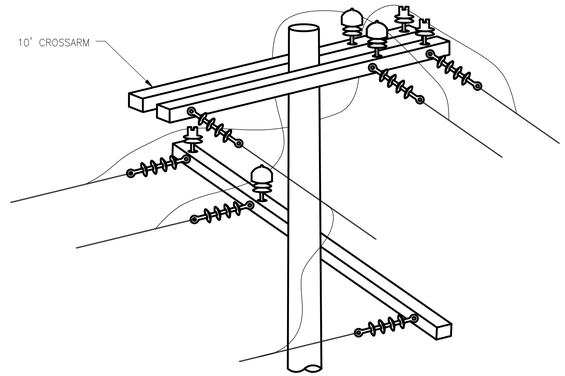

NOTES:

1. DOWN GUYS ARE NOT SHOWN
2. SEE DETAIL 4, THIS SHEET FOR POLE HOLE AND ANCHOR DEPTHS.

CORNER POLE

DETAIL 2

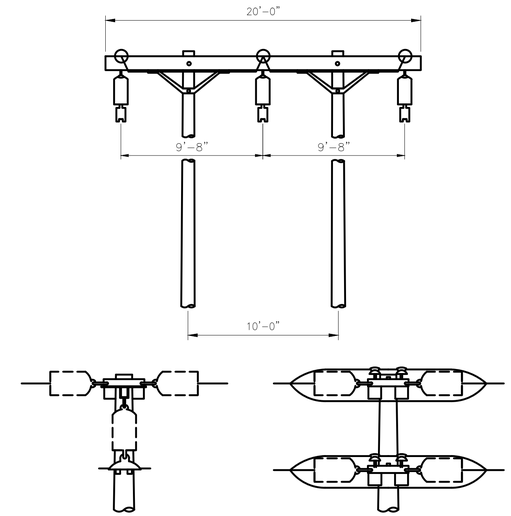

NOTES:

1. SEE DETAIL 4, THIS SHEET FOR POLE HOLE AND ANCHOR DEPTHS.

H-FRAME

DETAIL 3

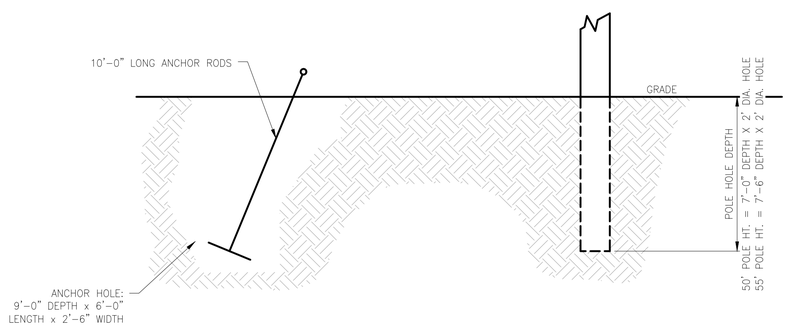

SIDE VIEW

NOTES:

1. SEE DETAIL 5, THIS SHEET FOR POLE HOLE AND ANCHOR PLAN VIEW

ELECTRICAL POLE ANCHOR & POLE HOLE DEPTH

DETAIL 4

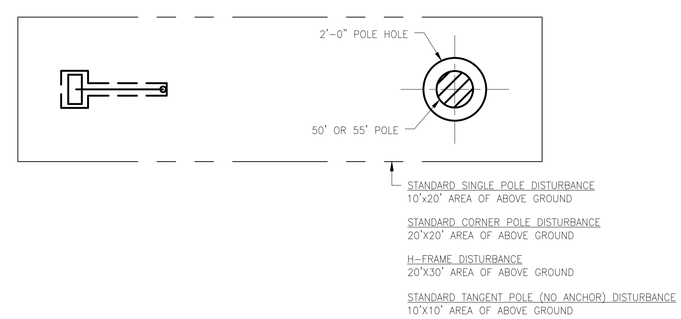

PLAN VIEW

ELECTRICAL POLE LIMITS OF DISTURBANCE

DETAIL 5

NOTES:

1. FOR PRIMARY SERVICE EQUIPMENT SPECIFICATIONS AND REQUIREMENTS, CONSULT SOUTHERN CALIFORNIA EDISON'S ESR MANUAL, SECTIONS 19.0 THROUGH 20.10 IN CHAPTER ESR-7, FIGURE 7-1.

REV	DATE	DRAWN	CHECKED	PRJ APV	SCG APV	ENG FILE NO	DESCRIPTION	WOA
0	07/02/2025	MCR	JAR				ISSUED FOR DR-001 RESPONSE	

	BY	DATE
DESIGNED:	J.RIFFEL	05/10/25
DRAWN:	M.RIZO	05/10/25
CHECKED:	S.HOPE	05/11/25
PROJ APV:		
SCG ENG APV:		
ENG FILE NO:		
WOA:		

SoCalGas — A Sempra Energy utility

DWG CLASS: 9,39 DWG DIST: 114

SCALE: NOT TO SCALE

VENTURA COMPRESSOR STATION
MODERNIZATION PROJECT
AVOCADO SITE
ELECTRICAL DISTR. INTERCONNECT PRELIMINARY DETAILS

DRAWING NUMBER 152084-5520-D-SKT REV 0

C:\Users\mcrizo\Burns & McDonnell\SoCalGas Ventura EPC Execution - Documents\CPUC Support\2025 Support\Design\CAD\Elec\OH ELECTRICAL\152084-5520-D-SKT.dwg, 8/28/2025 12:05 PM, Rizo, Mike C.

DRAWING NUMBER	REFERENCE DRAWING DESCRIPTION
152084-7001-D-SKT	CONCEPTUAL OVERALL SURFACING PLAN
152084-7004-D-SKT	CONCEPTUAL PIPELINE & UTILITY PLAN

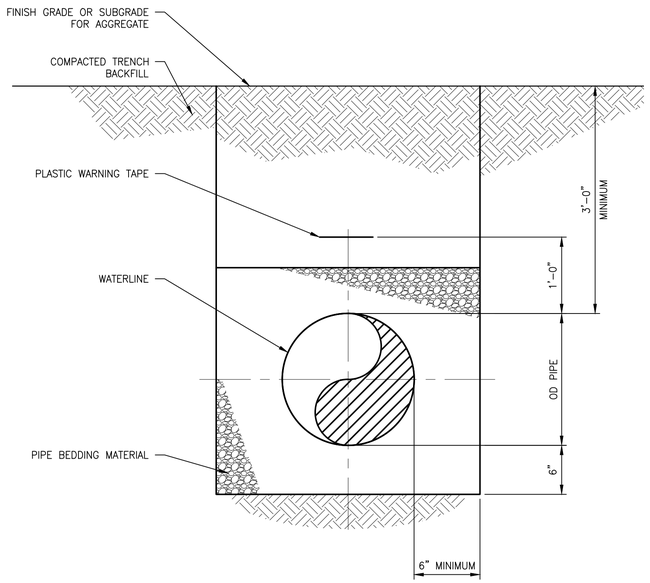

TYPICAL WATER TRENCH

DETAIL 1

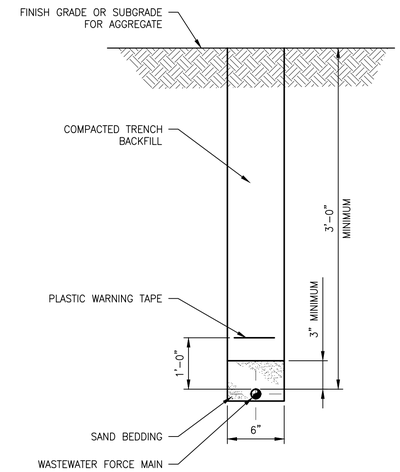

TYPICAL WASTEWATER TRENCH

DETAIL 2

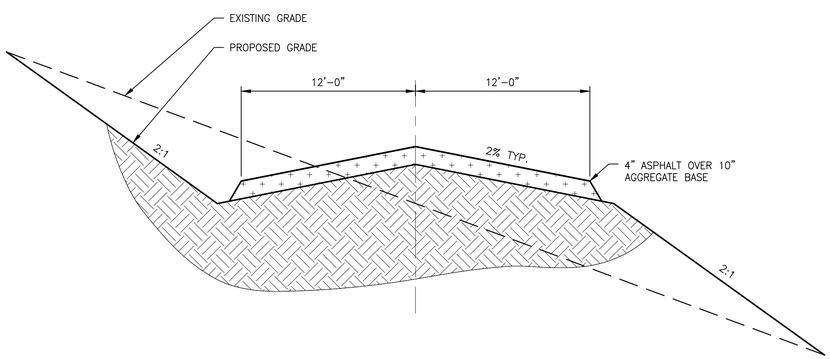

TYPICAL ROAD SECTION

DETAIL 3

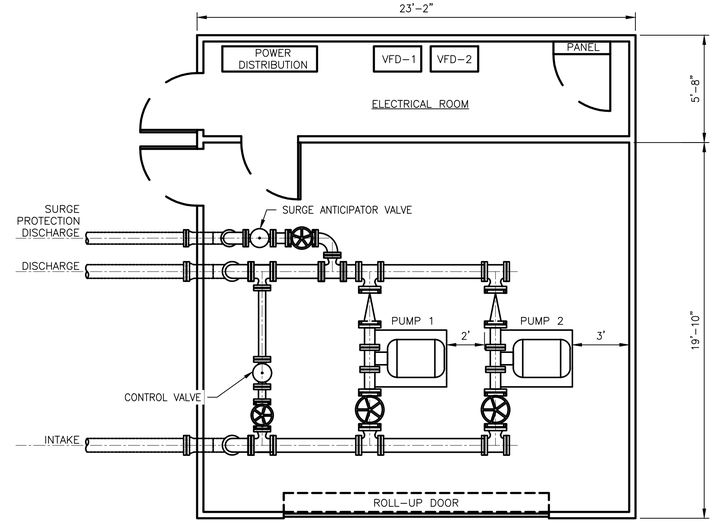

PUMP HOUSE GENERAL ARRANGEMENT

DETAIL 4

NOTES:

1. DETAILS BASED ON BURNS & MCDONNELL DESIGN STANDARDS. VERIFY IN LATER PHASES OF DESIGN.
2. AT ROADWAY CROSSINGS, BACKFILL WITH COMPACTED CRUSHED AGGREGATE BASE ROCK OR FLOWABLE FILL.
3. GRANULAR BEDDING MATERIAL FOR ALL NON-OIL PIPES SHALL BE CRUSHED ROCK CONFORMING TO ASTM C33 COARSE AGGREGATE, SIZE NO. 67.

REV	DATE	DRAWN	CHECKED	PRJ APV	SCG APV	ENG FILE NO	DESCRIPTION	WOA
1	07/25/2025	MCR	SLH				ISSUED FOR REVIEW	
0	07/02/2025	MCR	JBB				ISSUED FOR DR-001 RESPONSE	

	BY	DATE
DESIGNED:	J.BAKKER	05/13/25
DRAWN:	M.RIZO	05/13/25
CHECKED:	S.HOPE	05/16/25
PROJ APV:		
SCG ENG APV:		
ENG FILE NO:	E15043	
WOA:		

SoCalGas — A Sempra Energy utility

DWG CLASS: 9.39 | DWG DIST: 114

SCALE: NONE

VENTURA COMPRESSOR STATION
MODERNIZATION PROJECT
AVOCADO SITE
ROAD & UTILITY DETAILS

DRAWING NUMBER 152084-7131-D-SKT | REV 1

C:\Users\mcrizo\Burns & McDonnell\SoCalGas Ventura EPC Execution - Documents\CPUC Support\2025 Support\Design\Civil - Structural\CAD\Avocado\152084-7131-D-SKT.dwg, 7/30/2025 8:21 AM, Rizo, Mike C.

DRAWING NUMBER	REFERENCE DRAWING DESCRIPTION
152084-7004-D-SKT	CONCEPTUAL PIPELINE & UTILITY PLAN

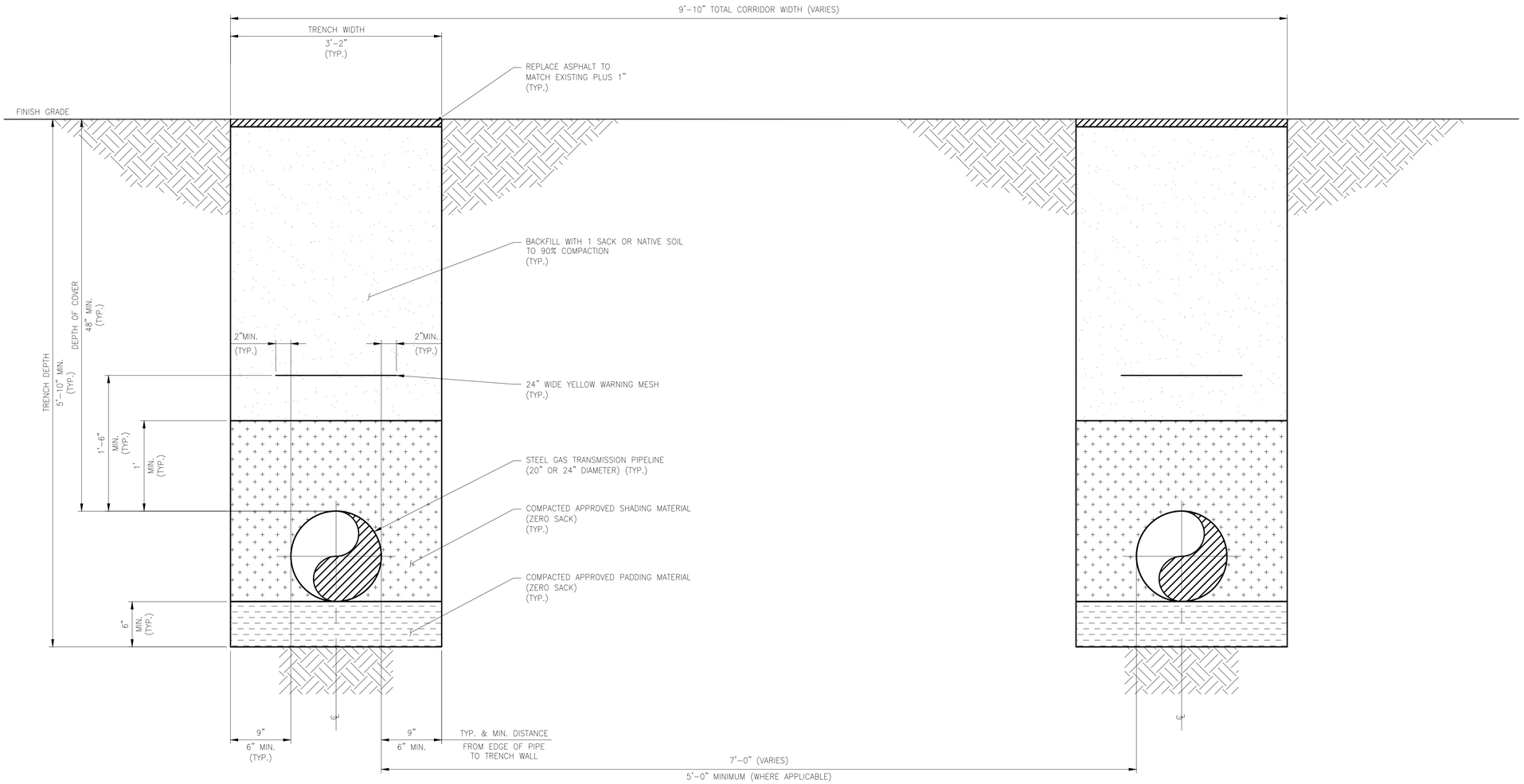

TYPICAL TWO GAS PIPELINES CORRIDOR DETAIL

DETAIL 1/-

NOTES:

1. DESIGN CODE AND GENERAL REQUIREMENTS:

   A. US DOT 49CFR192 (LATEST EDITION) – TRANSPORTATION OF NATURAL AND OTHER GAS BY PIPELINE
   B. ASME B31.8 (LATEST EDITION) – GAS TRANSMISSION AND DISTRIBUTION PIPING SYSTEMS
   C. CALIFORNIA PUBLIC UTILITY COMMISSION G.O. 112E
   D. FEDERAL OCCUPATIONAL SAFETY AND HEALTH STANDARDS ACT (OSHA)
   E. CALIFORNIA STATE INDUSTRIAL SAFETY ORDERS

REV	DATE	DRAWN	CHECKED	PRJ APV	SCG APV	ENG FILE NO	DESCRIPTION	WOA
0	07/02/2025	MCR	TRM				ISSUED FOR DR-001 RESPONSE	

	BY	DATE
DESIGNED:	M.RIZO	05/13/25
DRAWN:	M.RIZO	05/13/25
CHECKED:	T.McADORY	05/16/25
PROJ APV:		
SCG ENG APV:		
ENG FILE NO:		
WOA:		

SoCalGas
A Sempra Energy utility

DWG CLASS: 9,39 DWG DIST: 114
SCALE: NOT TO SCALE

VENTURA COMPRESSOR STATION
MODERNIZATION PROJECT
AVOCADO SITE
TWO GAS PIPELINES CORRIDOR DETAIL

DRAWING NUMBER 152084-7732-D-SKT REV 0

C:\Users\mcrizo\Burns & McDonnell\SoCalGas Ventura EPC Execution – Documents\CPUC Support\2025 Support\Design\CAD\Pipelines\AVOCADO\152084-7732-D-SKT.dwg, 7/7/2025 5:11 PM, Rizo, Mike C.